Signature Series Service Body - 98”

SB-98-79-49 (56 CA) **SCELZI Work Truck Bodies**

The Scelzi Signature Series is our Premium line of Service Bodies.

Key Features of all Scelzi Signature Truck Bodies

- **Three (3) year bulkhead to bumper warranty**
- Rivet-free chrome Scelzi T-bar door latches
- Three point latching system on all compartment doors
- Self-leveling tailgate with stainless steel side bracket hinges and diamond plate inner lining
- And many more

Scelzi Enterprises, Inc.
2286 East Date Avenue
Fresno, CA 93706
Office: (559) 237-5541

Toll Free: (800) 858-2883

www.SEINC.com

Every Scelzi Truck Body is precision-engineered to match the professional in the driver’s seat

NOTE: Some photos shown here may indicate optional equipment and design variations. Confirm your desired specifications at time of order.

SPECIFICATIONS: SCELZI Signature Series Body - 98"

Options

- Compartment height can be 33 or 38 or 43 inches
- Over-the-cab powder coated contour material rack

Available Models

VO	Vertical compartments with Open tops (standard)
HO	Horizontal compartments with Open tops
V	Vertical compartments with closed tops
H	Horizontal compartments with closed tops

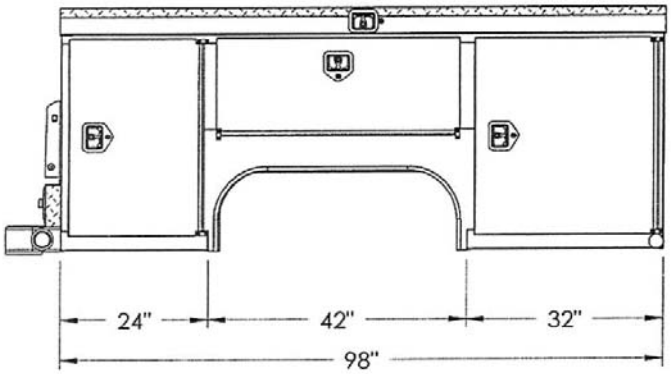

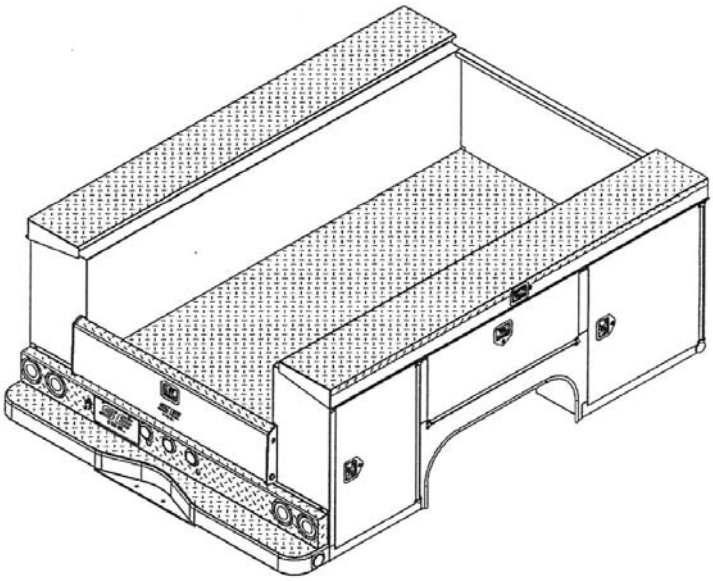

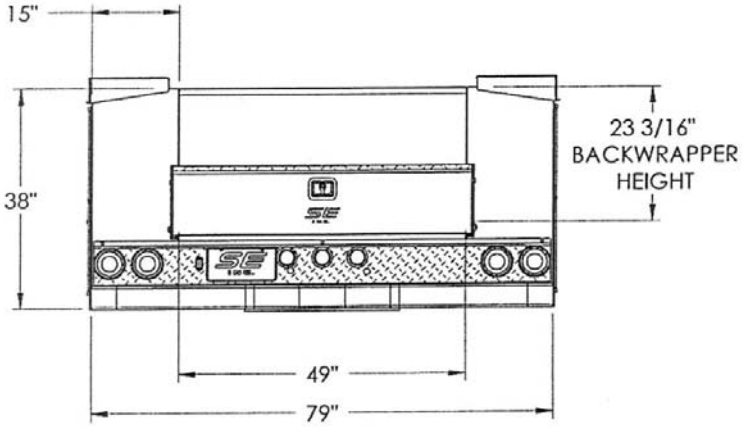

Optional Compartment Height

33" high
38" high
43" high

SCELZI Enterprises, Inc - Building Great Truck Bodies Since 1979

Abbreviations

CA	Cab to Axle length in inches
DRW	Dual rear wheel
H	Horizontal, closed top compartments
HO	Horizontal, Open top compartments
V	Vertical, closed top compartments
VO	Vertical, Open top compartments

Product Nomenclature

SB - 98 - 79 - 49 - 33 - VO

Body Type	Overall Body Length	Overall Body Width	Floor Width	Compartment Height	Compartment Configuration

Available Options for this model

33"	*VO (standard)*
38"	*HO*
43"	*V*
	H

Scelzi Enterprises, Inc.
2286 East Date Avenue
Fresno, CA 93706
Office: (559) 237-5541

Toll Free: (800) 858-2883

www.SEINC.com